DATA SHEET

SMART RELAY **MONITORING SYSTEM**

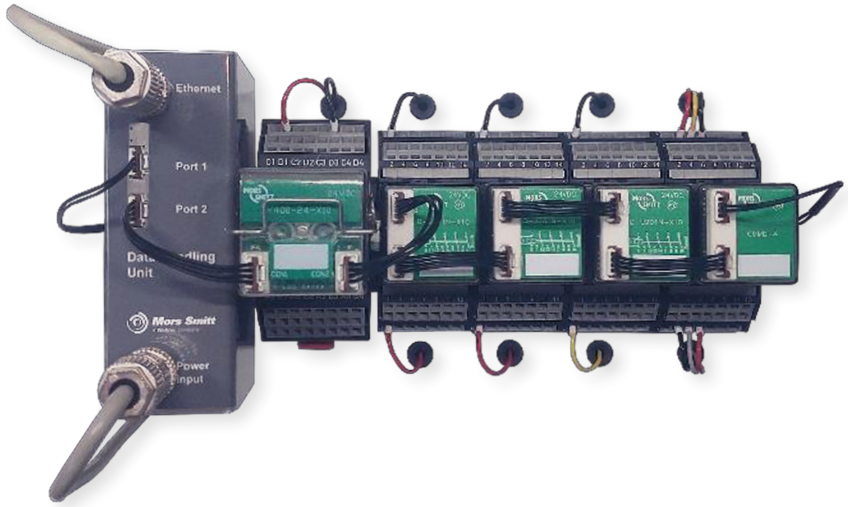

RUGGED PLUG-IN RELAYS FOR EXTREME RELIABILITY, WITHIN LONG ENDURANCE APPLICATIONS AND HARSH ENVIRONMENTS

System to real-time measure and store information about relays and its connected devices, to determine the actual health, enable condition-based maintenance, improve system reliability, reduce life cycle cost and optimize sustainability.

RAILWAY COMPLIANCY

EN 50155: 2017
IEC 60571: 2012
IEC 60077-1: 2017
IEC 60947-5-1: 2016
IEC 61373: 2010
EN 50121-3-2: 2016
EN 45545-2: 2020
NF F16-101/102
IEC 60947-5-4: 2002

CE

THE SYSTEM CONSITS OF

Voltage Measuring Module (VMM) as option to D-U200N or B400 relay: measures relay coil voltage and uses this data to calculate the number of operations. Also measures relay internal temperature.

Current Measuring Module (CMM) measures current through connected devices e.g. the device being switched by the relay. Available with 2 or 4 measurement channels

Data Handling Unit (DHU) stores all measured data.

CONTACT

Mors Smitt
Darwinstraat 10
6718 XR Ede
The Netherlands
+31 (0)88 600 4500
wnl_salessupport@wabtec.com

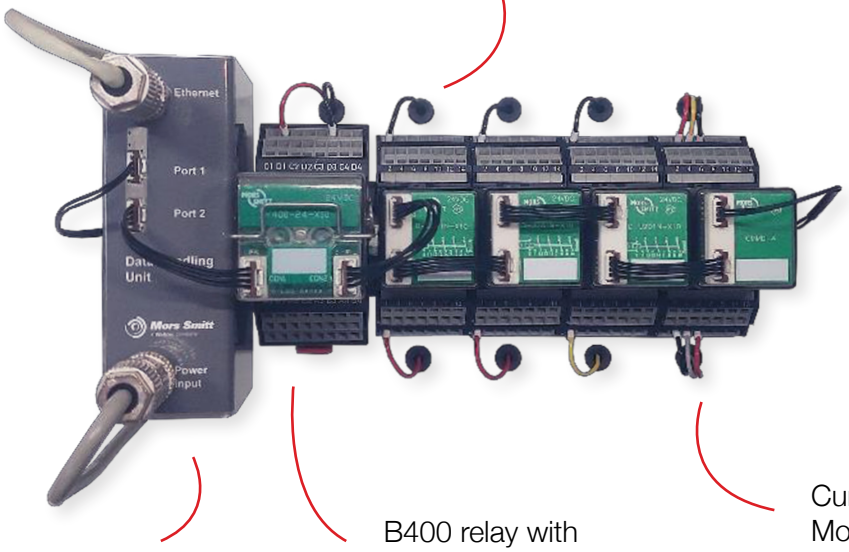

APPLICATION

The smart Relay Monitoring System can be used in demanding rolling stock applications for predictive maintenance and fault-finding purposes.

EXAMPLES

Door circuit
Monitor time between relay contact asking door to close and relay contact that shows it is closed. Time too long > door sticking or had mechanical problem.

Monitor time
for compressor being switched on until it reaches operating pressure. Time too long > compressor issues or air leaks.

Relay life
monitor operations and switching load to replace relay just before the lifetime is over.

Monitor burning hours of cabin lights
to replace them just before the lifetime is over.

Measure current
used by motor heating system. Current too high > motor issues.

Monitor internal relay temperature
Temperature is too high > issue with power / relay.

Trouble shooting
measure power levels and peak currents to find root cause of faltering fan.

CONTACT

Mors Smitt
Darwinstraat 10
6718 XR Ede
The Netherlands
+31 (0)88 600 4500
wnl_salessupport@wabtec.com

DATA SHEET

D-U200N relay with VMM option

B400 relay with VMM option

SPECIFICATIONS

Description	Parameters
Communication to DHU	Via serial bus Daisy chain connections allowed
Power	Via DHU (5V)
Voltage measurement	Range 0-312 V DC (0.1V resolution) Coil voltage read continuously VMM reports changes in coil voltage to DHU The DHU will count relay activations based on the VMM configured coil voltage
LED	Green LED blinking when communication is active
Temperature measurement	Temperature read continuously (1°C resolution) VMM reports changes in temperature to DHU
MTBF	>500.000 hours
Stand-alone	No influence on correct relay working or performance
Protection degree	IP 40 when connectors are installed
Option to D-U200N relay or B400 relay	See D-U200N datasheet and B400 datasheet for information about D-U200N relay and B400 relay
Weight	~ 140 gram
Connectors	VMM: Micro connector 4 pole (Molex 559350430)

CONTACT

Mors Smitt
Darwinstraat 10
6718 XR Ede
The Netherlands
+31 (0)88 600 4500
wnl_salessupport@wabtec.com

DIMENSIONS (MM)

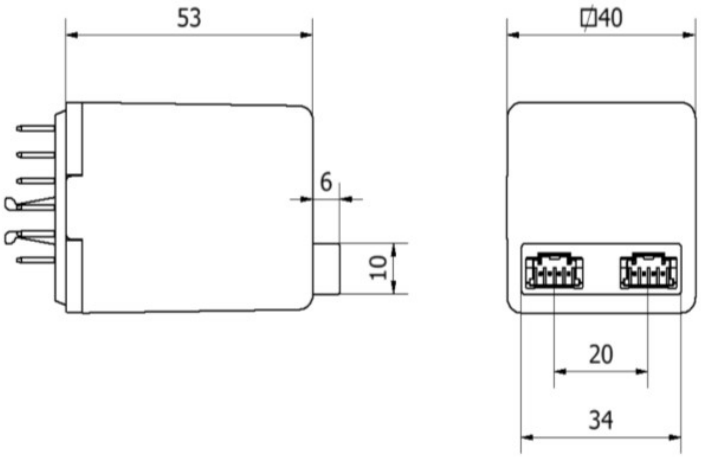

CURRENT MEASURING MODULE

CMM in D-relay housing

CONTACT

Mors Smitt
Darwinstraat 10
6718 XR Ede
The Netherlands
+31 (0)88 600 4500
wnl_salessupport@wabtec.com

SPECIFICATIONS

Description	Parameters
Communication to DHU	Via serial bus Daisy chain connections allowed
Power	24-110 VDC
Channels	
Current measurement	Range 0-3A or 3-10A Current read continously CMM reports changes in current to DHU Accuracy +/- 5%
LEDs	Green LED blinking when communication is active For each channel a red LED: turns ON when current is detected (minimum 10mA for 0-3A range)
MTBF	>500.000 hours
Protection degree	IP 40 when connectors are installed
Weight	2 channels: ~59 grams 4 channels: ~65 grams
Connectors	Micro connector 4 pole (Molex 559350430)

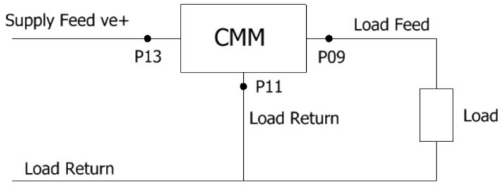

Wiring diagram Channel 1

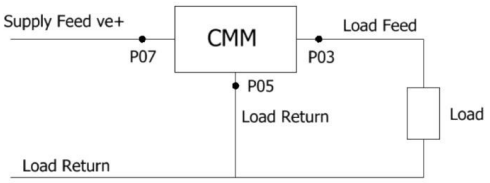

Wiring diagram Channel 2

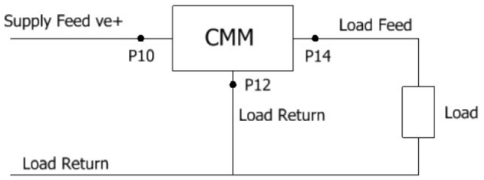

Wiring diagram Channel 3

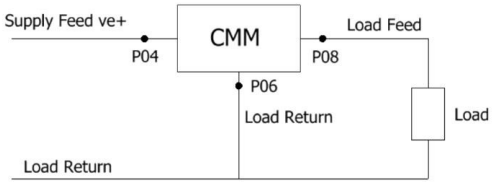

Wiring diagram Channel 4

CONTACT

Mors Smitt
Darwinstraat 10
6718 XR Ede
The Netherlands
+31 (0)88 600 4500
wnl_salessupport@wabtec.com

DIMENSIONS (MM)

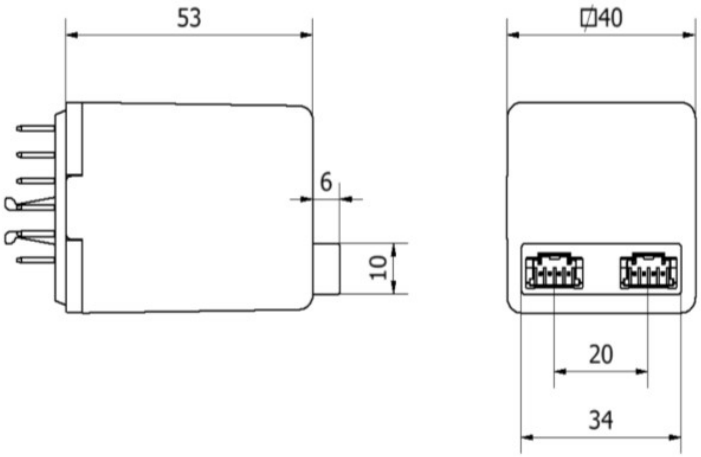

DATA HANDLING UNIT

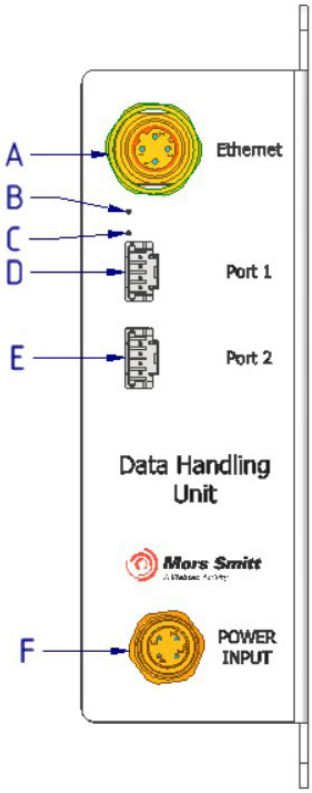

A. Ethernet: M12 female 4 pole shielded D-code adaptor (Harting 21033814410)
B. LED data transfer from Canbus Port 1/2
C. LED power status on
D. Canbus Port1 – Micro connector 4 pole (Molex 559350430)
E. Canbus Port2 – Micro connector 4 pole (Molex 559350430)
F. Power supply: M12 male 4 pole A-code adaptor (Harting 21033213401)

CONTACT

Mors Smitt
Darwinstraat 10
6718 XR Ede
The Netherlands
+31 (0)88 600 4500
wnl_salessupport@wabtec.com

SPECIFICATIONS

Description	Parameters
Communication to VMM/CMM	Via serial bus Daisy chain connections allowed
LEDs	LED: data transfer from Canbus Port 1/2 LED: power status on
MTBF	>500.000 hours
Maximum number of connected measurement modules	40
Length serial bus	max. 500 meter
Protection degree	IP 40 when connectors are installed
Memory	128 MB - Resembles 600 recordings per hour for 1 week for 60 datapoints Data written flash memory – no data loss after cut-off power
Material housing	Aluminum 1.5mm RAL7035 light gray painted
Weight	Wall mounted: 335 grams Rail mounted: 325 grams
Time	When connected to a laptop the time is automatically synchronized with the actual laptop time.
Output	.csv file
Protocol	Ethernet

CONTACT

Mors Smitt
Darwinstraat 10
6718 XR Ede
The Netherlands
+31 (0)88 600 4500
wnl_salessupport@wabtec.com

RAIL MOUNTED

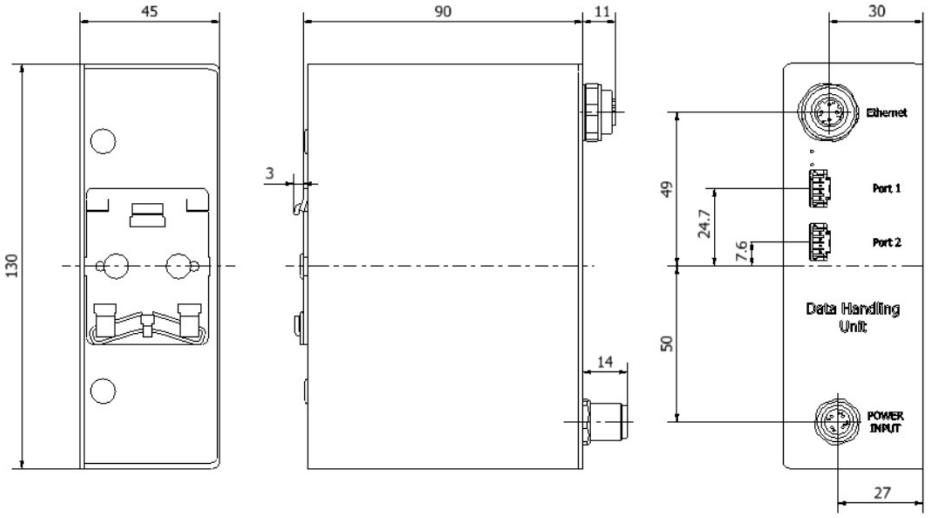

WALL MOUNTED

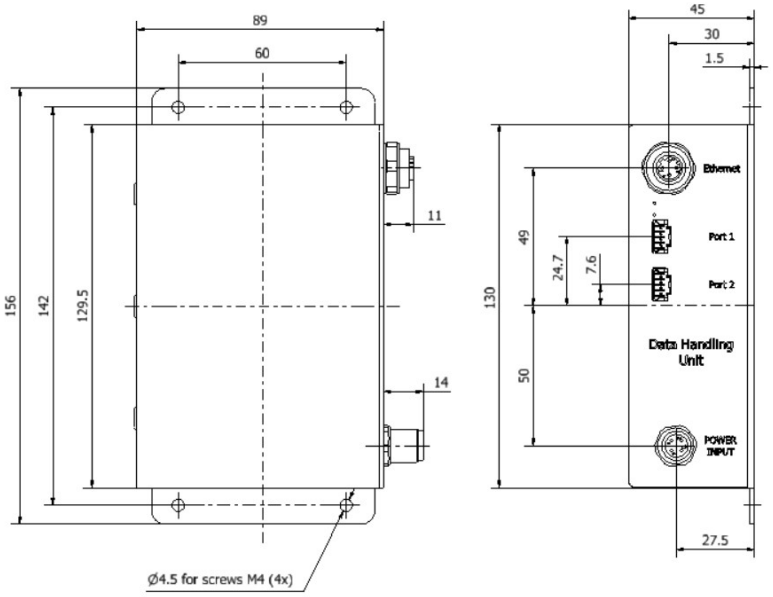

CONTACT

Mors Smitt
Darwinstraat 10
6718 XR Ede
The Netherlands
+31 (0)88 600 4500
wnl_salessupport@wabtec.com